LED Display Digital Pressure Gauge

PG801E Series

User Manual

Ordering Code

PG801E □□-□-□-□

- **Accuracy:** A: 1% F.S B: 0.25% F.S
- **Alarm:** Blank: No alarm J1: 1 alarm J2: 2 alarm
- **Range:** Vacuum to 600Bar
- **Output:** Blank: No output 300: 4-20mA 210: 0-10V
- **Thread Size:** 1: Standard M20X1.5 2: G1/2 3: G1/4 & 1/4NPT
- **PG801C Series LED Display Digital Pressure Gauge**

Example: PG801E3300-10Bar-J1-B: means the DPG is in 1/4 NPT or G1/4 thread size, with 4-20mA output, measuring range is 0-10Bar, 1 alarm and the accuracy is 0.25% F.S

Technical Data

Accuracy:	Silicon 0.25% F.S Ceramics: 1%
Power Supply:	10-33VDC
Pressure Range:	Vacuum to 600Bar
Housing:	Stainless Steel
Operating Temperature:	-20 to 85 Degrees
Store Temperature:	-20 to 85 Degrees
Temperature Shift:	0.05% F.S per Degree
Size:	84mm dia
Engineering Unit:	Any unit for option when ordering
Thread Size:	M20X1.5, G1/2, 1/4 NPT and others
Frontal Panel:	Polycarbonate, OEM available
Max Allowed Load:	RL less than 600 Ohm
Over Pressure:	200% of the Pressure Range, Less than 1200Bar
Burst Pressure:	400% of the Pressure Range, Less than 1200Bar
Output:	4-20mA or 0-10V
IP Rate:	IP66
Weight:	Abt. 750G

Panel Illustration

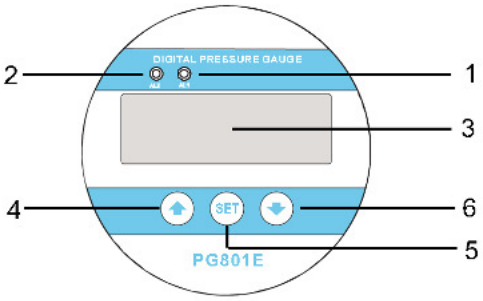

1. Alarm 1 indication lamp.
2. Alarm 2 indication lamp.
3. 4 digit LED display.
4. Up button.
5. SET/Confirm button.
6. Down Button

Operation Process

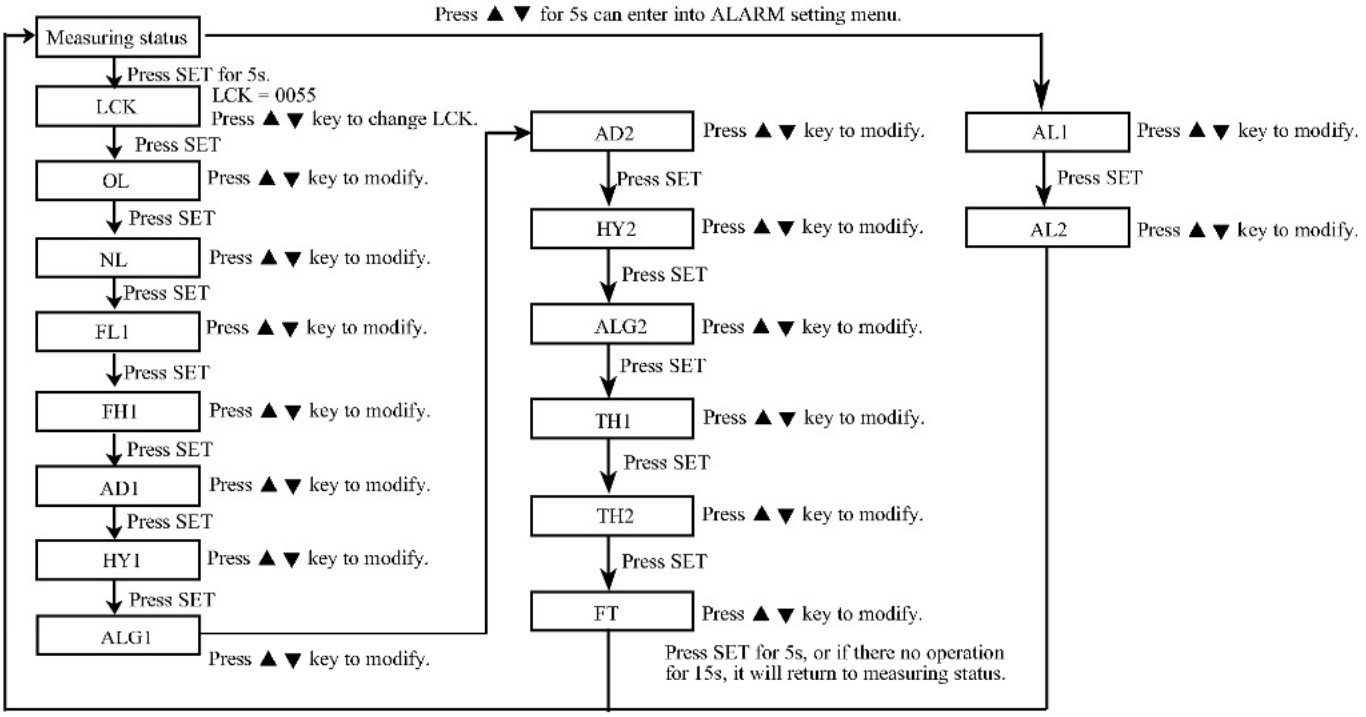

Symbol	Parameter	Function	Default setting
LCK	Menu lock	When LCK=0055 can enter into the parameter setting menu.	0000
AL1	Alarm 1#	Alarm 1# range setting: (-1999) ~ 9999	9999
AL2	Alarm 2#	Alarm 2# range setting: (-1999) ~ 9999	9999
0L	Zero point shielded	Shielded the small signal after the decimal point. Example, if you set 0L=0.05, then it will display "0" when the signal is 0.05 or smaller than 0.05. Clients can set an appropriate 0L value accordingly.	0.000
NL	0L function setting	NL=NO: means 0L does not work; NL=YES: means 0L works.	NO
FL1	Lowest value setting	Lowest display value setting	0.000
FH1	Setting highest value	Highest display value setting	5.000
AD1	AL1 mode setting	H: Upper limit alarm; L: Lower limit alarm, eg,when the AL1 value is 100(Bar), if you select H, the alarm works when value large than 100, if you select L, alarm works when value lower than 100.	H
HY1	AL1 alarm hysteresis	Users can set an appropriate hysteresis value to prevent the relay moving too frequently.	0.000
ALG1	Power on alarm select	NO: power on lower limit alarm, YES: not alarm when power on	NO
AD2	AL2 mode setting	H: Upper limit alarm; L: Lower limit alarm	H
HY2	AL2 alarm hysteresis	Users can set an appropriate hysteresis value to prevent the relay moving too frequently.	0.000
ALG2	Power on alarm select	NO: power on lower limit alarm, YES: not alarm when power on	NO
TH1	Analogue upper limit	Analogue output upper limit setting: (-1999) ~ 9999	0.000
TH2	Analogue lower limit	Analogue output lower limit setting: (-1999) ~ 9999	5.000
FT	Sampling rate	Sampling rate (1 ~ 10 times/s)	5

Dimension Size

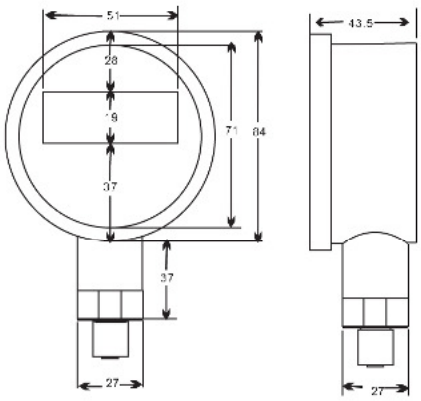
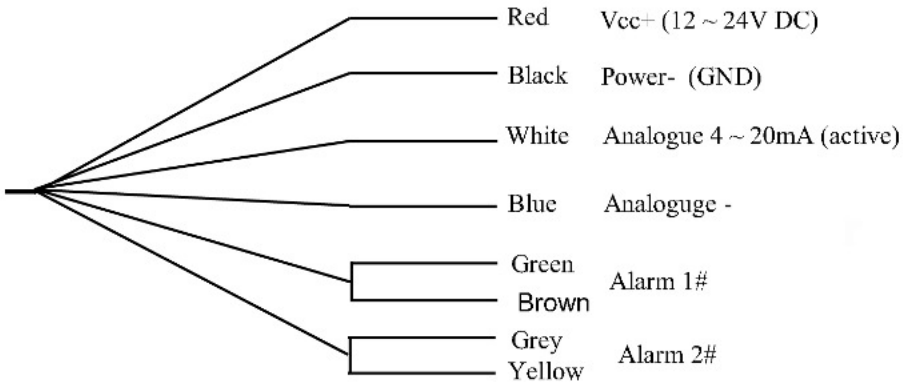
Wire Connection